Outline Drawing

客户确认签名 Customer approved		日期 Date	

VER	REVISION RECORD	Date	Name
A	NEW RELEASE	2020/04/18	zxp
B			
C			

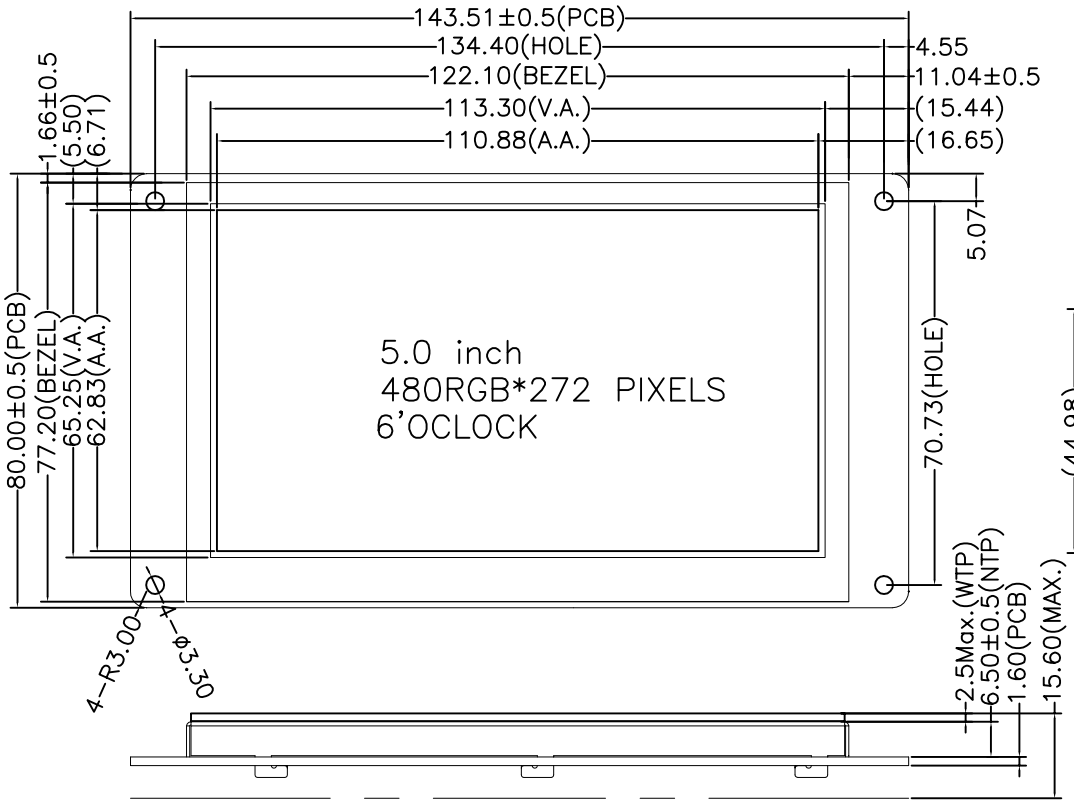

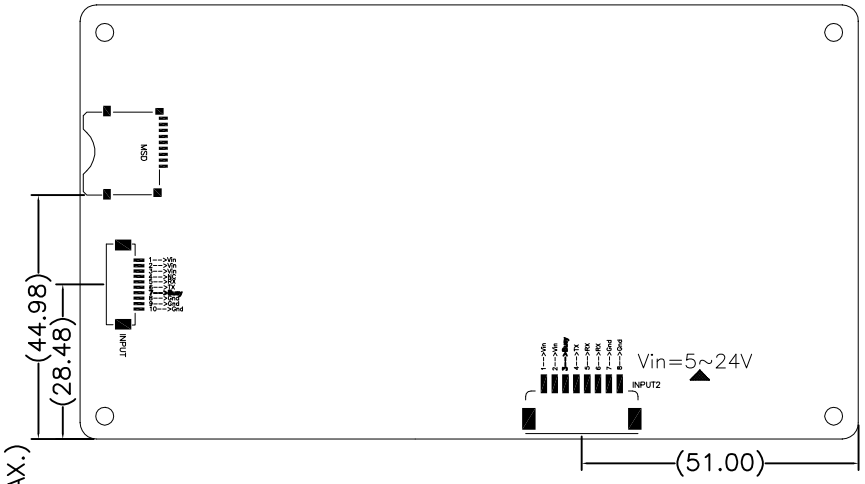

INPUT:

PIN No.	SYMBOL	Description
1~3	Vin	Power supply input
4	NC	Undefined
5	Rx	RS232 data input
6	Tx	RS232 data output
7	Busy	Busy flag output
8~10	Gnd	Ground

INPUT2:

PIN No.	SYMBOL	Description
1~2	Vin	Power supply input
3	Busy	Busy flag output
4	Tx	RS232 data output
5	Rx	RS232 data input
6	Rx	RS232 data input
7~8	Gnd	Ground

NOTE

1.Lcd Display Type: 5.0' SMART UART TFT LCM,480*272
2.Polarzier Mode:Transmissive,normally white
3.Viewing Direction: 6 O'CLOCK
4.Logic Supply Voltage: 5.0V
5.Control IC:
6.Backlignt: White
7.Backlight brightness and uniformity: 280cd/m2,>=80%
8.Operating Temp: -20 TO 70℃
9.Storage Temp：-30 TO 80℃
10.Connector:
11.Ulteriorly Tolerance:±0.2MM

NO TP: LMT050R10NT01
CTP: LMT050R10CT01
RTP: LMT050R10RT01

E.V.T 深圳市隼目显示技术科技有限公司 Shenzhen Eagle Vision Display Technology Co., Ltd				LCM TYPE 5.0吋串口TFT
Dwg:		CUSTOMER		Material No.
Check:		MODULE	LMT050R10NT01	SCALE: 1:1
Dim: MM		Visual Angle		SHEET 1 OF 1

由 Autodesk 教育版产品制作