Outline Drawing

客户确认签名 Customer approved		日期 Date	

VER	REVISION RECORD	Date	Name
A	NEW RELEASE	2007/12/15	YOYO
B			
C			

RoHS

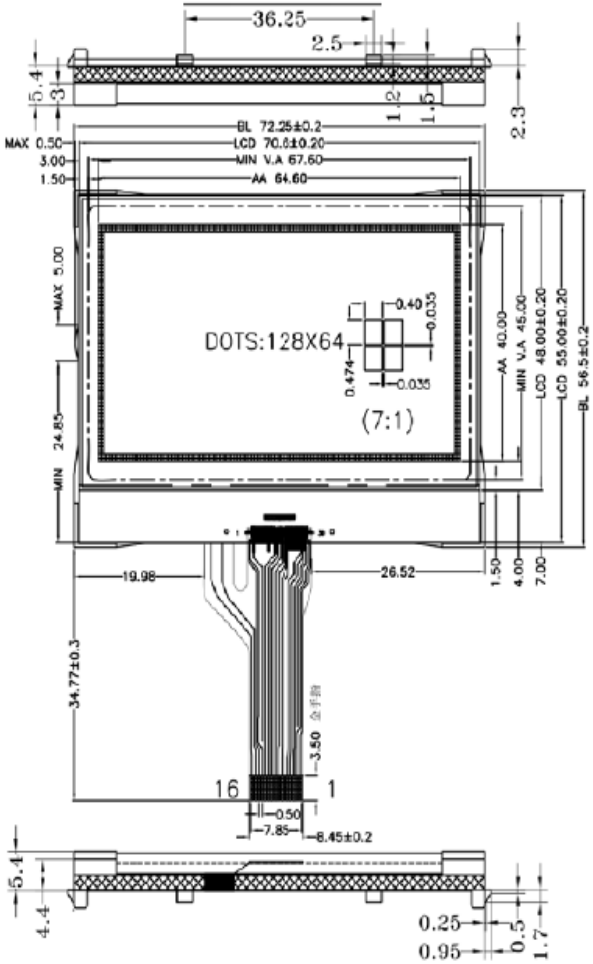

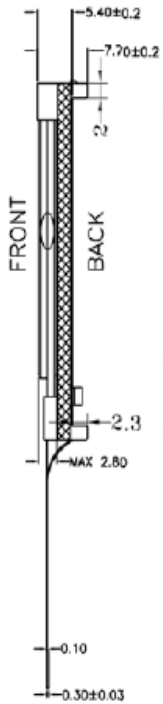

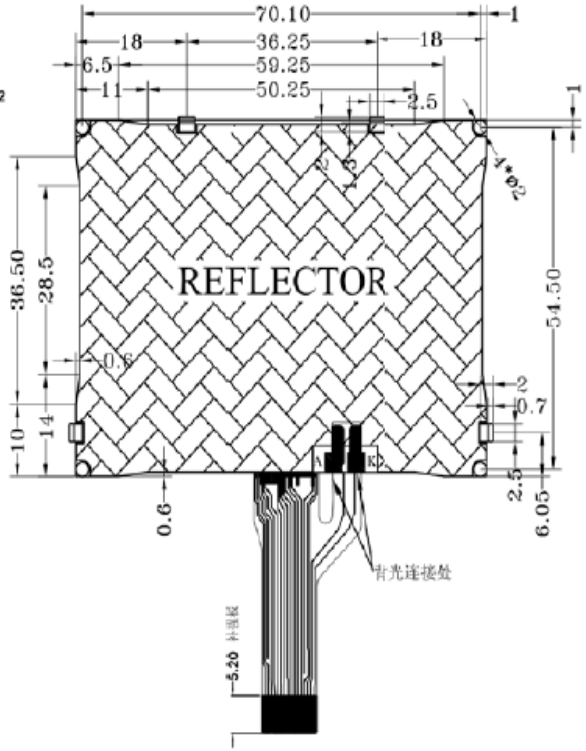

PIN	ASSIGN
1	END
2	END
3	CS
4	REST
5	A0
6	SCLK
7	SDA
8	VDD
9	VSS
10	V0
11	XV0
12	VG
13	END
14	END
15	LED A
16	LED K

NOTE

1.Lcd Display Type: FSTN
2.Polarzier Mode:Transflective,positive
3.Viewing Direction: 6:00
4.Drive Method:1/9Bias,1/65Duty
5.Logic Supply Voltage: 3.3V
6.LCD Driving Voltage: 9.0V
7.Operating Temp: -10 TO 50℃
8.Storage Temp：-20 TO 60℃
9.Control IC: ST7567(COG)
10.Backlignt: White(4*Led),ILed=15mA,VIed=12.0V
11.Connector: fpc
12.Ulteriorly Tolerance:±0.2MM

E.V.T	深圳市隼目显示技术科技有限公司 Shenzhen Eagle Vision Display Technology Co., Ltd			LCM TYPE 128*64 DOTS
Dwg:		CUSTOMER		Material No.
Check:		MODULE	LMG12864021FNWT-A	SCALE: 1:1
Dim: MM		Visual Angle		SHEET 1 OF 1

由 Autodesk 教育版产品制作